GAST/JUN-AIR

PART NUMBER: RTD899

REVISION: D

PRODUCT SPECIFICATIONS

MODEL NO.	MOTOR	DUTY	AMP 60HZ	AMP 50HZ	RPM 60HZ	RPM 50HZ	HP	kW	NET WT. lbs.	NET WT. kg	CAPACITOR mfd.	CAPACITOR VOLT
86R145-101-N270X	100-120/200-240 (6OHz) 100-120/200-240 (50Hz)	50 PSI MAX./ MAX. VAC	2.6/1.4	3.3/1.7	1725	1425	1/4	0.19	14.9	6.8	30	370
	110-120/220-240 (6OHz) 110-120/220-240 (50Hz)	100 PSI MAX.	2.9/1.6	3.5/2.0								

SOUND LEVEL +5 °C - +40 °C

NORMAL AMBIENT 20% - 80%

RELATIVE HUMIDITY CLEAN DUST FREE

ENVIRONMENT LESS THAN 65 db(A)

NOTES:
1. TECHNICAL DATA SUBJECT TO CHANGE WITHOUT NOTICE.
2. THIS PUMP MUST BE INSTALLED IN AN ENCLOSURE.
3. ALL DIMENSIONS ARE FOR REFERENCE ONLY.
4. KIT P/N: K961.

PRODUCT PERFORMANCE:

*A: FOR VOLTAGE 100-120/200-240, 50 & 60 Hz PEFORMANCE CURVE IS 50 PSI MAX., AND VAC. DUTY.
B: FOR VOLTAGE 110-120/220-240, 50 & 60 Hz PEFORMANCE CURVE IS 100 PSI MAX.

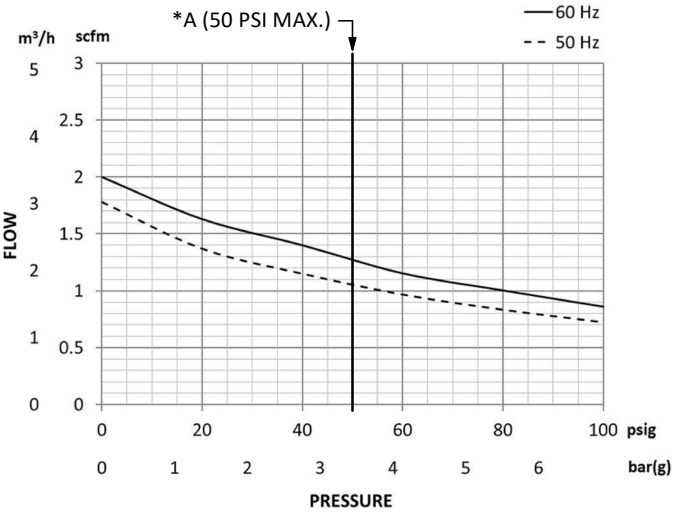

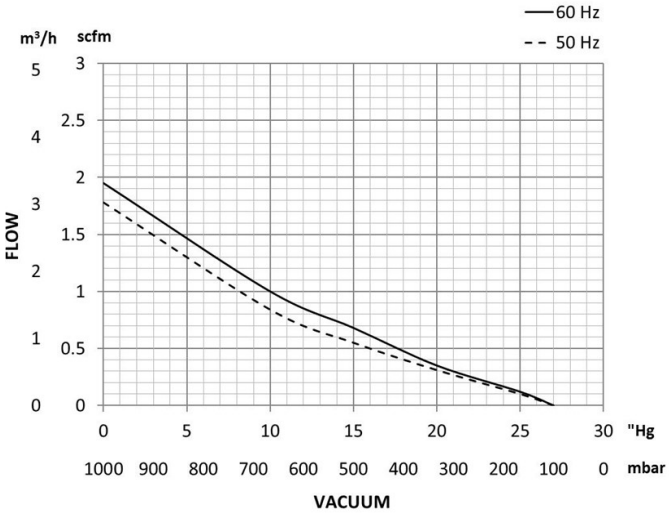

PRODUCT DIMENSIONS:

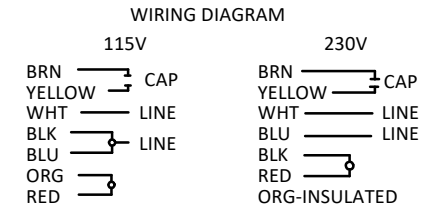

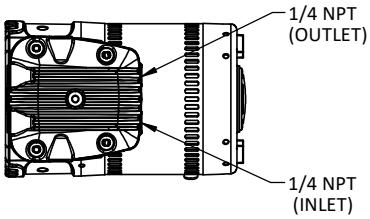

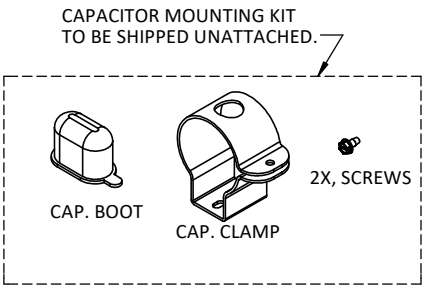
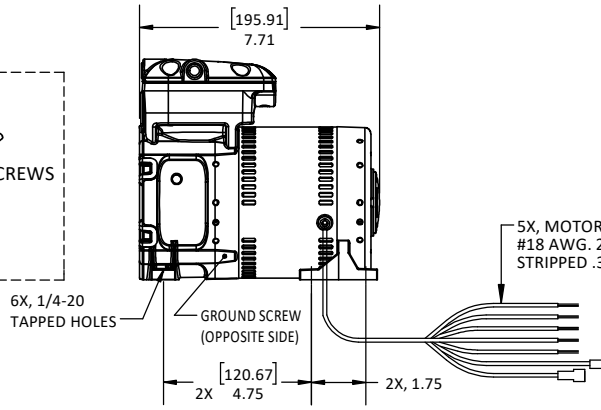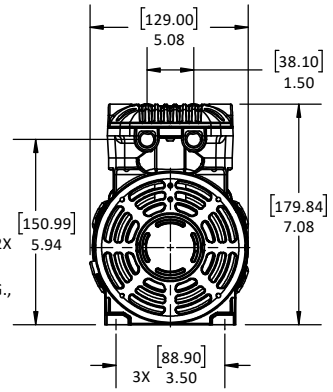
CAPACITOR TO BE SHIPPED UNATTACHED